WMD-30/40

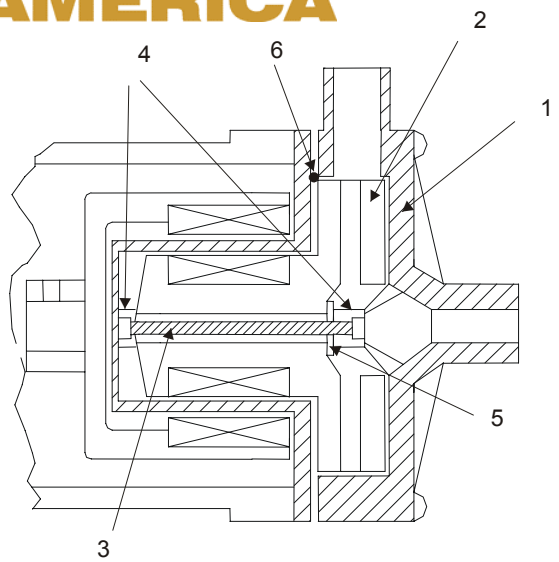

- **Twin bearing system handles thrust loads, extends service life**
- **Hollow rotating spindle/internal cooling circuit reduces bearing temperature**
- **Compact design**
- **Quiet energy efficient design**
- **Other sizes, voltages and material available**
- **Few moving parts for easy maintenance**

Part	Material
1 Casing	GFRPP
2 Impeller	GFRPP or CFRPP
3 Spindle	Ceramic
4 Bearing	PTFE
5 Thrust Ring	Ceramic or PE
6 O-ring	FKM (fluoroelastomer) or EPDM

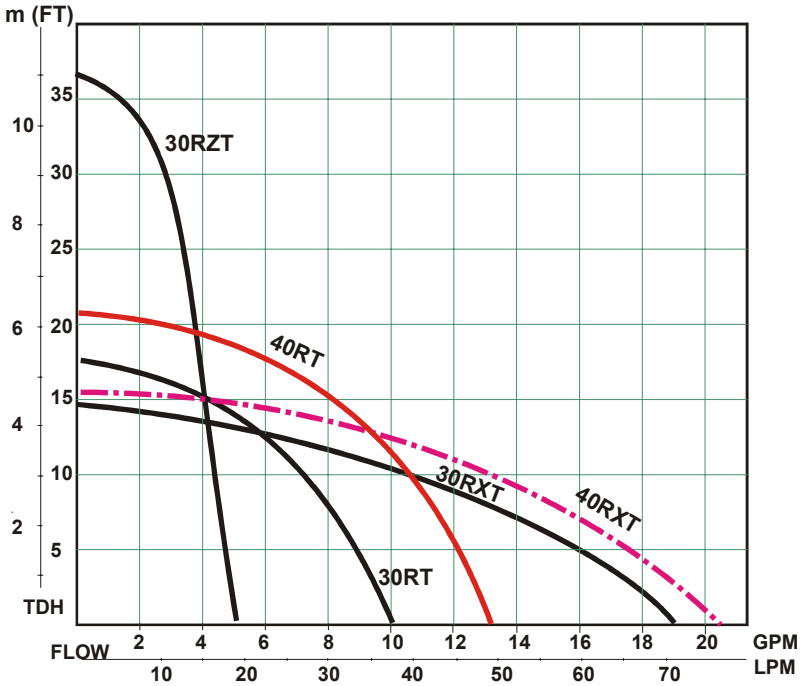

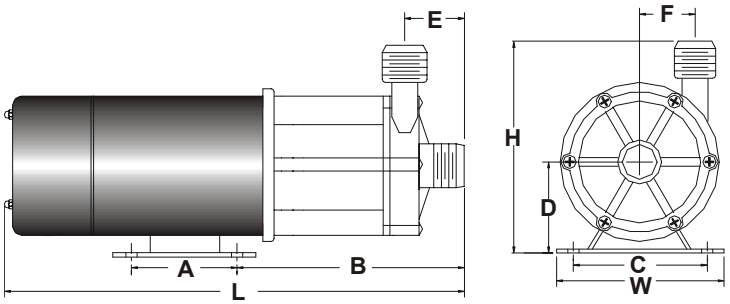

Dimensions (inches) and Specifications
+Degrees offset from vertical

Model	W	H	L	A	B	C	D	E	F
WMD-30R(T)	3.50	4.70	11.87	2.37	5.45	2.62	1.93	1.89	1.22
WMD-30RX(T)	3.50	5.05	12.12	2.37	5.63	2.62	1.93	1.97	15+
WMD-30RZ(T)	3.50	4.66	11.25	2.37	4.78	2.62	1.93	1.56	1.52
WMD-40R(T)	4.38	4.75	11.00	3.12	6.74	3.37	2.09	1.89	1.22
WMD-40RX(T)	4.38	5.25	11.12	3.12	6.87	3.37	2.09	1.97	15+

Model	Connections		Motor		Amps 115V	Max Flow (gpm)	Max Head (ft)	Max Sys Pressure (PSI)	Spec Grav	Wgt (lbs)
	Hose	NPTM	Output	Speed						
WMD-30R(T)	¾	¾	1/16	3150	1.0	10.0	17.7	11.6	1.3	9
WMD-30RX(T)	1	1	1/16	3150	1.0	19.0	13.5	8.5	1.1	9
WMD-30RZ(T)	5/8	¾	1/16	3150	1.0	4.6	36.1	24.2	1.0	9
WMD-40R(T)	¾	¾	1/12	3200	1.9	13.7	21.3	14.2	1.1	10
WMD-40RX(T)	1	1	1/12	3200	1.9	22.4	15.4	10.0	1.1	10

5 Boynton Road Hopping Brook Park Holliston, MA 01746-1446 USA
TEL: 508-429-1440 FAX: 508-429-1386 www.iwakiamerica.com