WMD-100

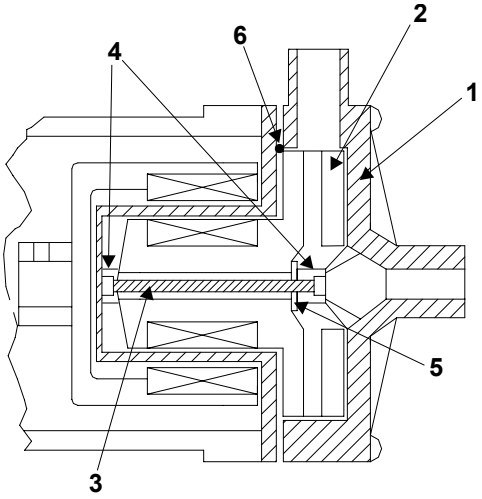

- **Twin bearing system handles thrust loads, extends service life**
- **Hollow rotating spindle / Internal cooling circuit reduces bearing temperature**
- **Compact / Quiet energy efficient design**
- **Few moving parts for easy maintenance**
- **Other sizes, voltages & materials available**

Part	Material
1 Casing	GFRPP
2 Impeller	GFRPP or CFRPP
3 Spindle	Ceramic
4 Bearing	PTFE
5 Thrust ring	Ceramic or PE
6 O-ring	FKM or EPDM

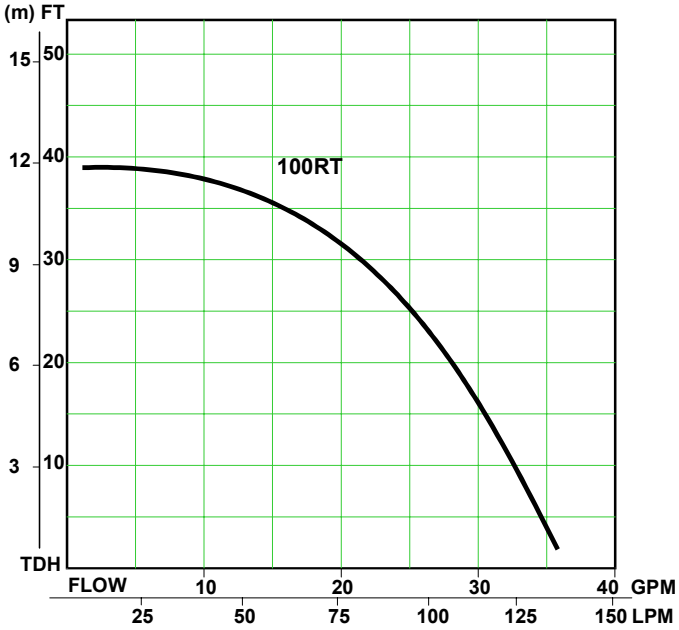

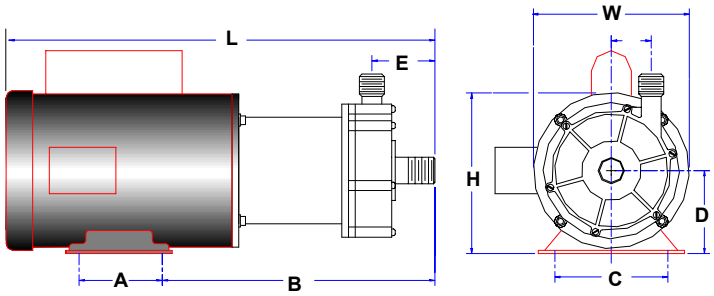

Dimensions (inches) and Specifications

Model	W	H	L	A	B	C	D	E	F
WMD-100R(T)	6.60	6.80	*	3.00	12.05	4.88	3.50	2.55	1.71

* Varies with motor manufacturer

Model	CONNECTIONS		MOTOR		AMPS 115V	MAX FLOW GPM	MAX HEAD FT	MAX SYS PRESSURE PSI	S.G.	WEIGHT LBS
	HOSE	NPTM	OUTPUT (HP)	SPEED (RPM)						
WMD-100	1	1	1/3	3600	3.4*	35.6	39.0	25.6	1.2	*

5 BOYNTON ROAD HOPPING BROOK PARK HOLLISTON, MA 01746-1446 USA
TEL: 508-429-1440 FAX: 508-429-1386 ON THE INTERNET: WWW.IWAKIAMERICA.COM